01.1 PORT LOCATION MAP
SCALE 1: NTS METERS

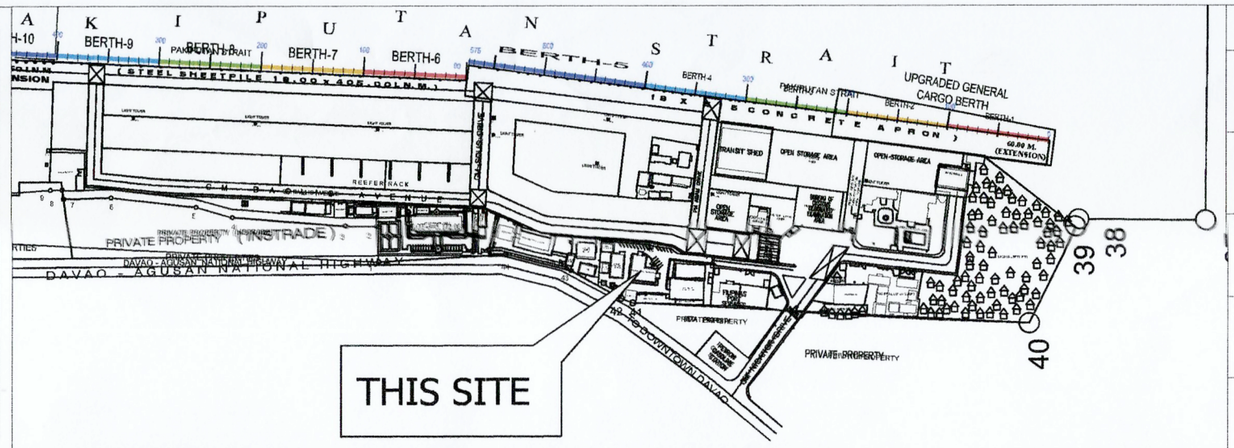

01.2 LOCATION PLAN
SCALE 1: NTS METERS

SHT. NO.	DESCRIPTION
01	PORT LOCATION MAP, LOCATION PLAN, SITE DEVELOPMENT PLANT, ACTUAL PICTURES OF EXISTING PORT OPERATIONS BUILDING A
02	EXISTING ROOF TRUSS (REFERENCE), END-BAY SECTION (DOWNSPOUT DETAIL),GUTTER DETAIL, AND COA BILLBOARD WOODEN FRAME DETAIL

01.3 SHEET CONTENTS
SCALE 1: NTS METERS

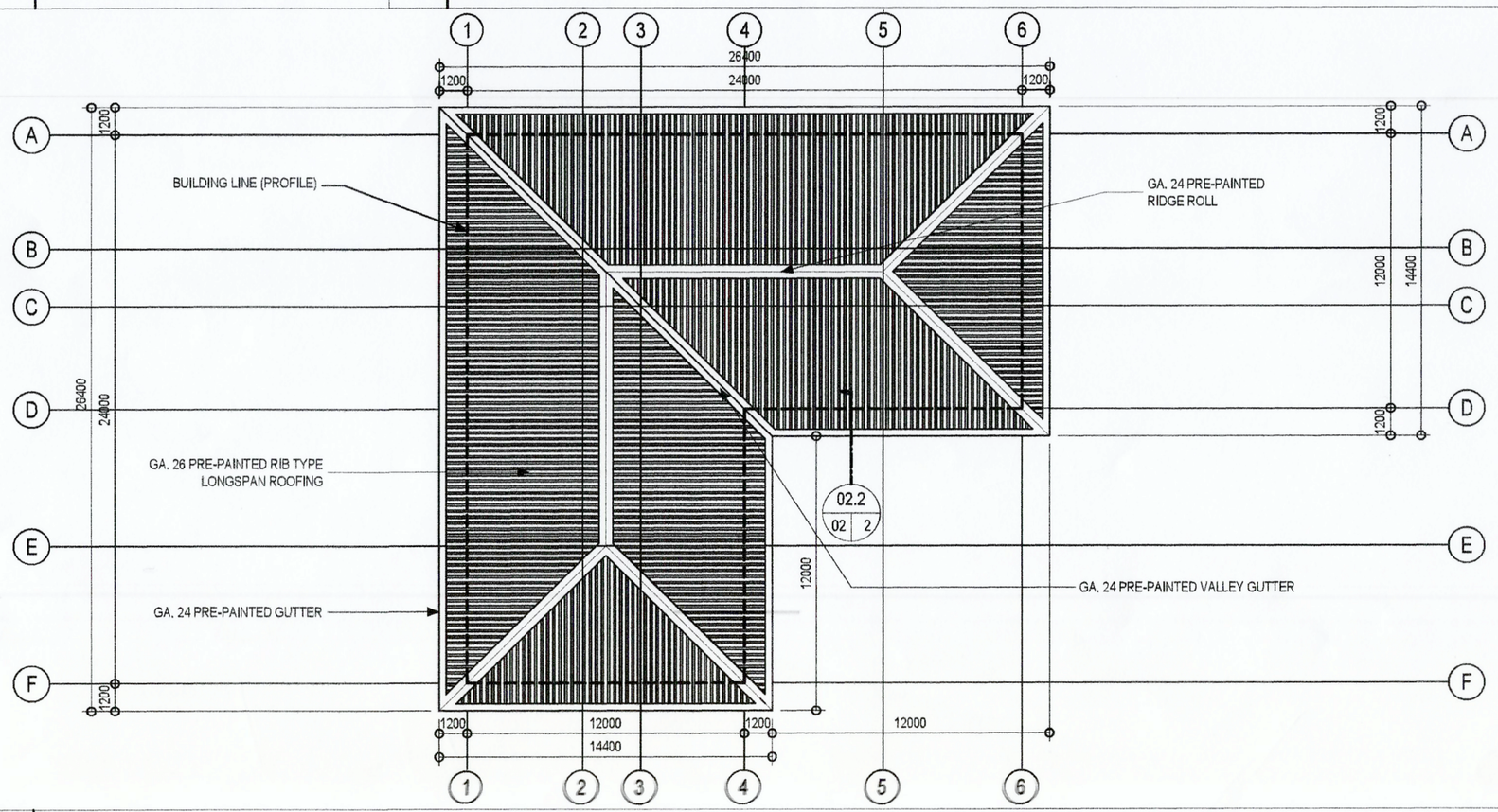

01.4 4TH FLOOR OPERATIONS BUILDING A EXISTING ROOF PLAN
SCALE 1: 250 METERS

01.4 ACTUAL PICTURES OF EXISTING POB – A
SCALE 1: NTS METERS

PHILIPPINE PORTS AUTHORITY
PMO DAVAO

PREPARED BY:	CHECKED AND REVIEWED BY:	RECOMMENDING APPROVAL BY:	APROVED BY:
VICTOR A. JASPE *ENGINEERING ASSISTANT–A*	EDELPETER L. DE LA ROSA *SUPERVISING ENGINEER*	LARA SIMONE L. ABA *ACTING ESD MANAGER*	ANALEE G. AGUILA *PORT MANAGER*

OWNER: ANALEE G. AGUILA, *PORT MANAGER*

SHEET CONTENTS: PORT LOCATION MAP, LOCATION PLAN, SHEET CONTENTS, 4TH FLOOR OPERATIONS BUILDING A EXISTING ROOF PLAN, ACTUAL PICTURES OF EXISTING POB–A

PROJECT TITLE: REPAIR OF EXISTING ROOFING OF PM's QUARTERS

LOCATION: SASA PORT, KM. 10 PORT AREA, SASA, DAVAO CITY

REVISIONS	
DATE	REMARKS
ADDENDUM	
NO.	–
PROJECT	–
DATE	–
DRAWN	–

SHEET NO. 01 OF 2

CADD BY VAJ
DATE DRAWN 10/11/2024
DATE UPDATED 10/20/24

DRAWING AND SPECIFICATION DULY SIGNED, STAMPED OR SEALED AS INSTRUMENTS OF SERVICES ARE THE PROPERTY OF THE ARCHITECT, WHETHER THE OBJECTS FOR WHICH THEY ARE MADE IS EXECUTED OR NOT. IT SHALL BE UNLAWFUL FOR ANY PERSON WITHOUT THE WRITTEN CONSENT OF THE ARCHITECT OF THE SAID DOCUMENTS TO DUPLICATE OR TO MAKE COPIES OF THE SAID DOCUMENTS FOR USE IN REPETITION OF AND FOR PROJECTS OR BUILDINGS WHETHER PARTLY OR WHOLELY EXECUTED. R.A.545 SECTION 25(4).

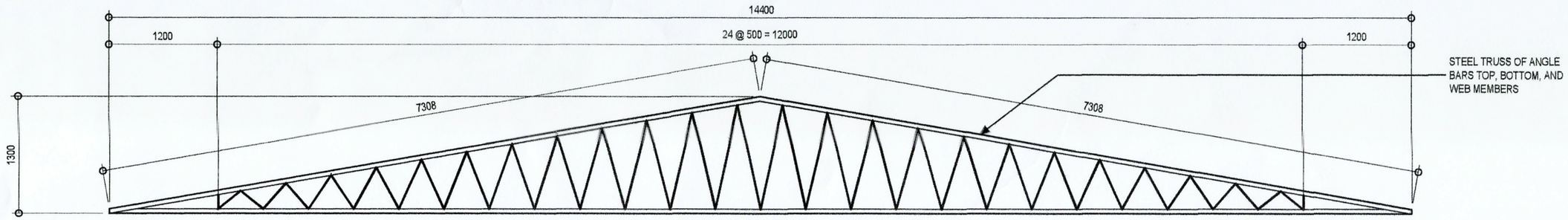

02.1 EXISTING ROOF TRUSS (REFERENCE)
SCALE 1: 50 METERS

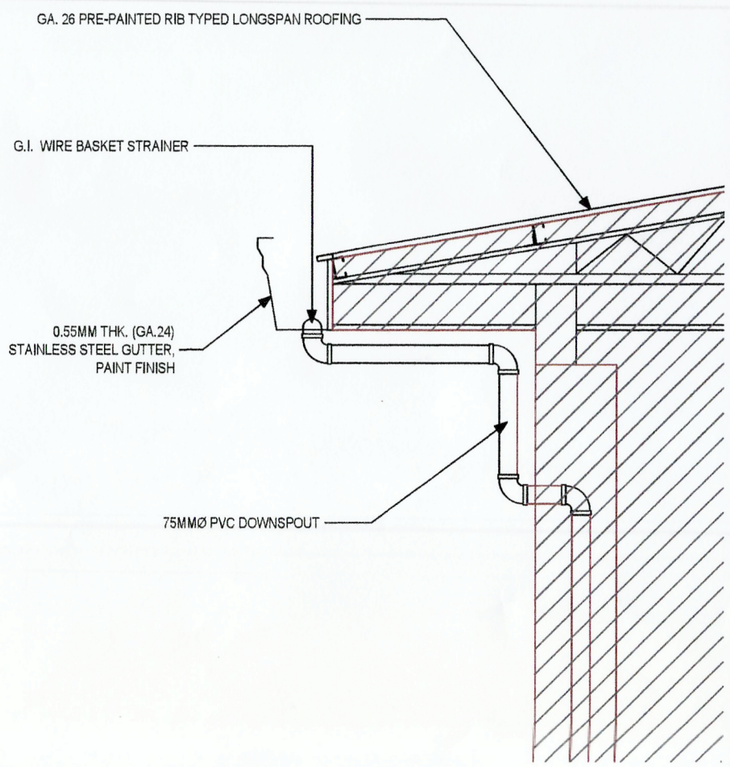

02.2 END-BAY SECTION (DOWNSPOUT DETAIL)
SCALE 1: 30 METERS

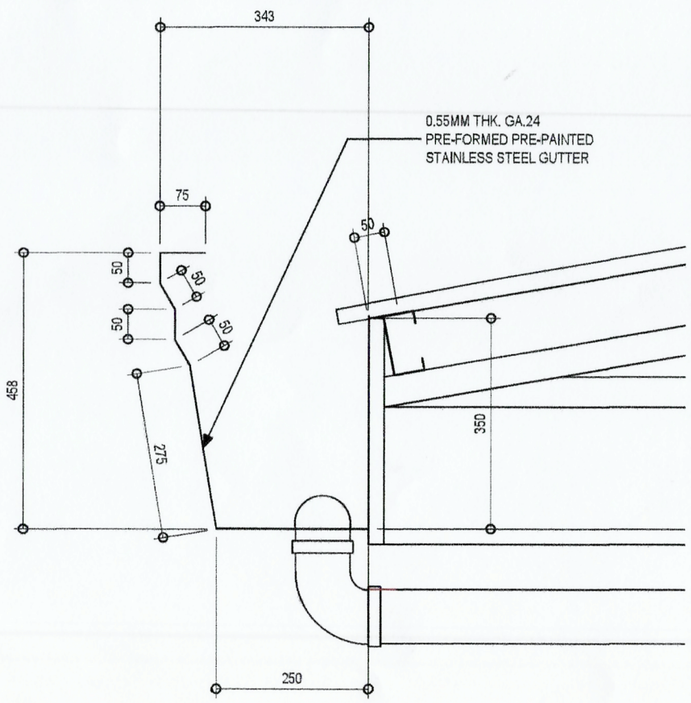

02.3 GUTTER DETAIL
SCALE 1: 10 METERS

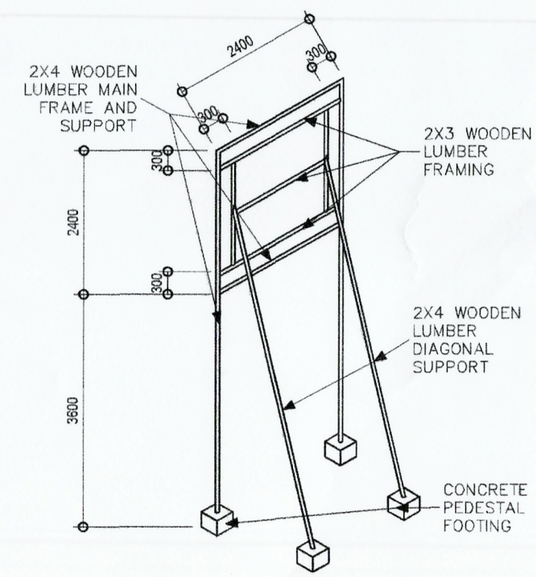

02.4 COA BILLBOARD WOODEN FRAME DETAIL
SCALE 1: 100 METERS

PHILIPPINE PORTS AUTHORITY
PMO DAVAO

PREPARED BY:	CHECKED AND REVIEWED BY:	RECOMMENDING APPROVAL BY:	APROVED BY:
VICTOR A. JASPE *ENGINEERING ASSISTANT-A*	EDELPETER L. DE LA ROSA *SUPERVISING ENGINEER*	LARA SIMONE L. ABA *ACTING ESD MANAGER*	ANALEE G. AGUILA *PORT MANAGER*

OWNER: ANALEE G. AGUILA, *PORT MANAGER*

SHEET CONTENTS: EXISTING ROOF TRUSS (REFERENCE), END-BAY SECTION (DOWNSPOUT DETAIL),GUTTER DETAIL, AND COA BILLBOARD WOODEN FRAME DETAIL

PROJECT TITLE: ---

LOCATION: SASA PORT, KM. 10 PORT AREA, SASA, DAVAO CITY

REVISIONS	
DATE	REMARKS
ADDENDUM	
NO.	–
PROJECT	–
DATE	–
DRAWN	–

SHEET NO. 02 OF 2

CADD BY VAJ
DATE DRAWN 10/20/24
DATE UPDATED MM/DD/YY

DRAWING AND SPECIFICATION ONLY SIGNED, STAMPED OR SEALED AS INSTRUMENTS OF SERVICE ARE THE PROPERTY OF THE ARCHITECT, WHETHER THE OBJECTS FOR WHICH THEY ARE MADE IS EXECUTED OR NOT. IT SHALL BE UNLAWFUL FOR ANY PERSON WITHOUT THE WRITTEN CONSENT OF THE ARCHITECT OF THE SAID DOCUMENTS TO DUPLICATE OR TO MAKE COPIES OF THE SAID DOCUMENTS FOR USE IN ADDITION OF AND FOR PROJECTS OR BUILDINGS WHETHER PARTLY OR WHOLLY EXECUTED. R.A.545, SECTION 26(A)